Linear Actuator External type
2-phase Motor & Rolled Ball Screw type (2TMB)

MoBo

2-phase Rolled MoBo

●Features

- A 2-phase Stepping Motor is mounted directly onto the shaft end of a Ct7 grade Rolled Ball Screw,which means compact and multipurpose type product.
- Ball Screw Shaft is ideally constructed to form the Motor Rotor Shaft.
- Since combining the Motor Shaft and Ball Screw Shaft, Coupling-less, saving total length,and reducing labor cost can be achieved.
- Recommended Driver for 2-phase Stepping Motor is available.
- Flexible length can be provided by the end journal turning.
- Stable mounting is secured by the exclusive Support Unit.
- Accessories are also provided as mounting kit, such as Nut block and Motor plate.

●Specifications

Model	Shaft Nominal Dia. (mm)	Lead (mm)	Travel (mm)	Travel per pulse (μm)	Reference Thrust (N)	Mass (g)
2TMB0801	φ8	1	150	5	75	350
2TMB0802	φ8	2	150	10	100	400
2TMB0805	φ8	5	150	25	50	400
2TMB0812	φ8	12	150	60	25	400

Repeatability(reference)	max. ±0.01mm
Lost Motion(reference)	max. 0.01mm

※The reference value about Repeatability and Lost Motion represents when the MoBo built into KSS original actuator. Please make a contact to KSS for actual value.

Note1) Detail specifications & dimensions are shown in drawings from page F129.
Note2) Travel per pulse represents the value for full step.
Note3) Acceleration & Deceleration Rate should be 50ms/kHz or more.
Note4) Reference Thrust may vary depending on the operating condition, please ask KSS for more detail.

●Motor Specifications

Model	Motor size (mm)	Rated voltage (V)	Rated current (A/phase)	Winding resistance (Ω)	Holding torque (Nm)	Rotor Inertia ($g \cdot cm^2$)
2TMB0801	□42	DC 2.2	2.0	1.1	0.24	42
2TMB0802	□42	DC 2.2	2.0	1.1	0.24	42
2TMB0805	□42	DC 2.2	2.0	1.1	0.24	42
2TMB0812	□42	DC 2.2	2.0	1.1	0.24	42

Driving method	2-phase Bi-polar
Basic step angle	1.8°

Note) Rotor Inertia includes Ball Screw Shaft.

●Motor Characteristic

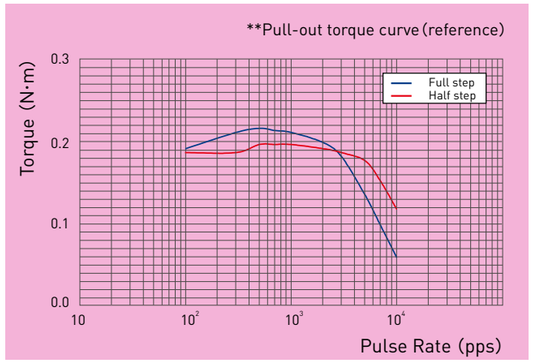

■Test condition

Driver : Maker Standard
Input Voltage : DC24V
Phase Currnt : 2.0A

Note) Motor characteristic will vary depending on Driver type, opearting conditions.

●Schematic

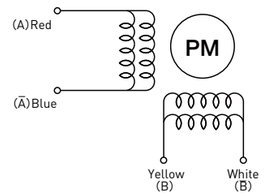

Swiching sequence for CW rotation viewed from shaft end.

STEP	Red (A)	Yellow (B)	Blue (Ā)	White (B̄)
0	+	+	−	−
1	−	+	+	−
2	−	−	+	+
3	+	−	−	+
0	+	+	−	−

●End-journal turning & Exclusive Support Unit

All of KSS 2-phase Rolled MoBo are in stock. In order to meet the request of flexible length, Shaft end journal turning is available. Please note that re-work is only for cutting and turning down.(see photo below)
KSS does not process Ring groove machining on the end of Shaft. Exclusive Support Unit with Brg. & Retaining ring for hole is provided by KSS.

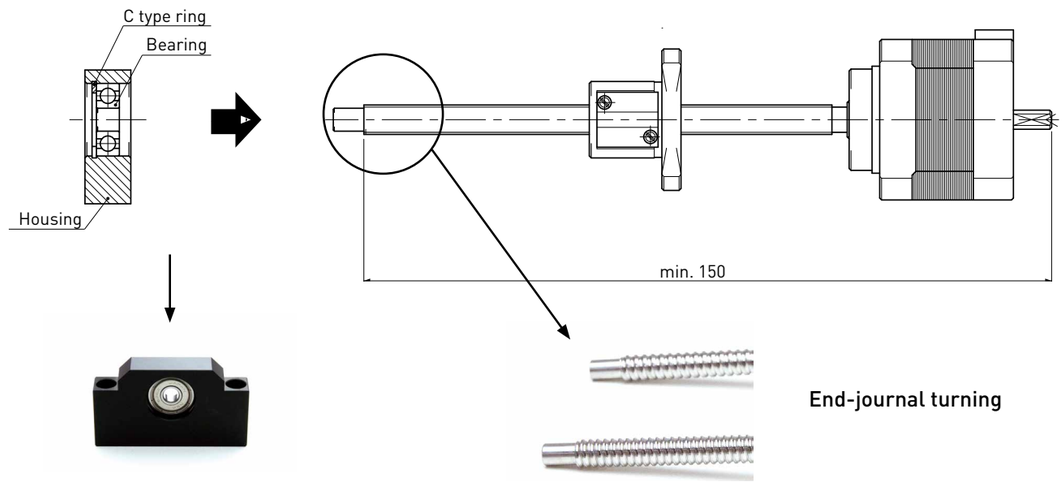

Please note that minimum re-work length is 150mm (except re-work portion) as shown in figure above.
Total length shorter than 150mm (except re-work portion) should be used as cantilever.
If supported journal with ring groove or total length of less than 150mm is required, it will be available as a customized order.

KSS Exclusive Support Unit for 2-phase Rolled MoBo, please see page F156(SP-42S) .
Special profile of Support Unit is required, please ask KSS representative.

Standard products in stock
2TMB series

Dimensions & Specifications

Rolled Ball Screw ＋ 2-phase Stepping Motor

2TMB0801

Shaft dia. ϕ8 Lead : 1mm
Travel : 150mm

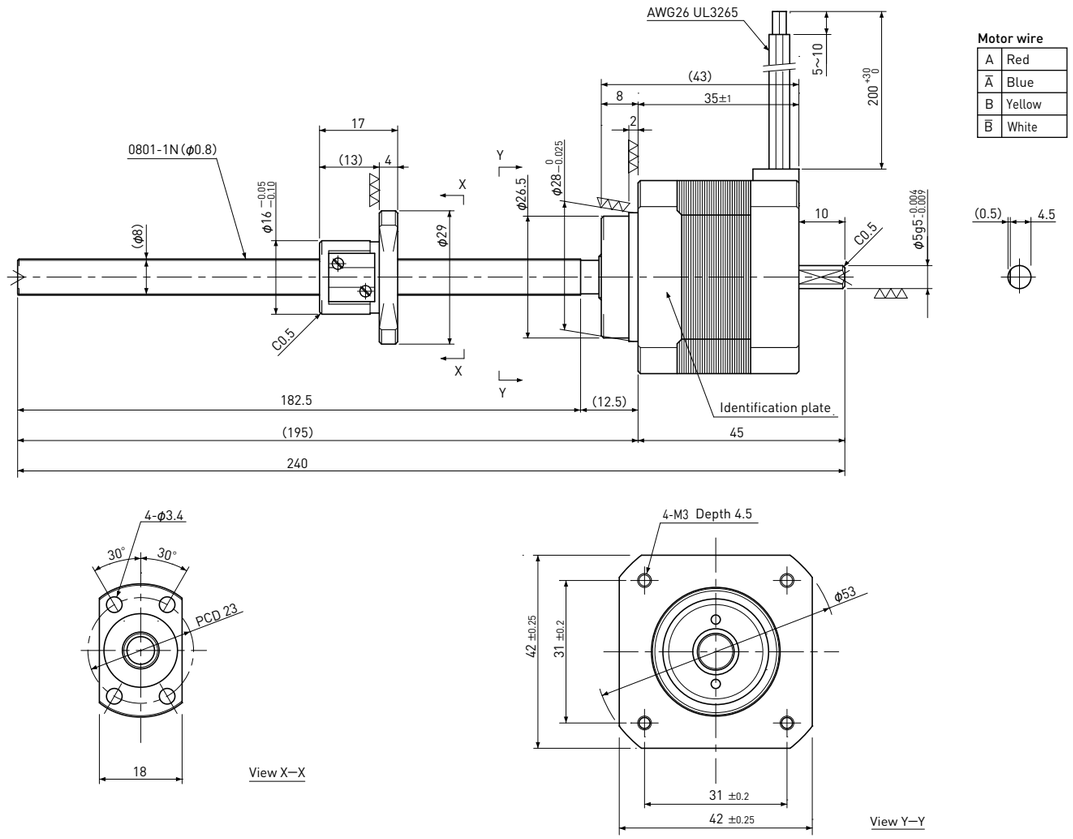

Recommended Drivers	SD4030B2

Note) Refer to page F160 for connection diagram of recommended Drivers.

Recommended accessories	Motor side Supporting plate	MP-42A or MP-42B
	Exclusive Support Unit	SP-42S
	Nut Block	NB-0801R

Ball Screw Specifications	
Accuracy grade	Equivalent to JIS Ct7
Thread direction	Right
Axial play	0.03mm or less
Reference Thrust	75N
Shaft material	Stainless steel
Nut material	Chrome-molybdenum steel
Surface hardness	Min. HRC55 (Thread area)
Lubricant	KSS original grease MSG No.2

Motor Specifications	
Basic step angle	1.8°
Driving method	2-phase Bi-polar
Rated Voltage	DC 2.2 V
Rated current	DC 2.0 A
Winding resistance	1.1Ω
Holding Torque	0.24Nm
Rotor inertia	42g・cm²
Operating temperature	−20℃～ 50℃

Note) Please refer to page F128 about end-journal turning.

MoBo Series
Linear Actuator External type
2-phase Motor & Rolled Ball Screw type

Standard products in stock
2TMB series

Dimensions & Specifications

Rolled Ball Screw ＋ 2-phase Stepping Motor

2TMB0802

Shaft dia. ϕ8 Lead : 2mm
Travel : 150mm

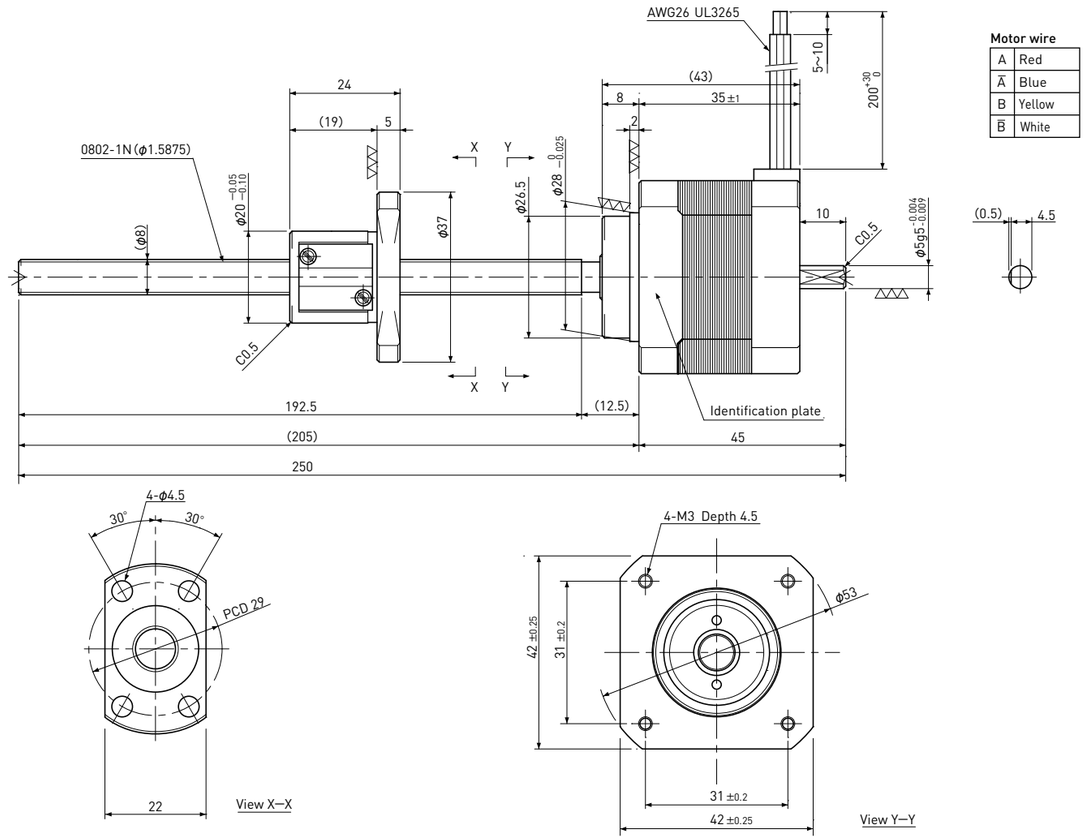

Recommended Drivers	SD4030B2

Note) Refer to page F160 for connection diagram of recommended Drivers.

Recommended accessories	Motor side Supporting plate	MP-42A or MP-42B
	Exclusive Support Unit	SP-42S
	Nut Block	NB-0802R

Ball Screw Specifications	
Accuracy grade	Equivalent to JIS Ct7
Thread direction	Right
Axial play	0.03mm or less
Reference Thrust	100N
Shaft material	Stainless steel
Nut material	Chrome-molybdenum steel
Surface hardness	Min. HRC55 (Thread area)
Lubricant	KSS original grease MSG No.2

Motor Specifications	
Basic step angle	1.8°
Driving method	2-phase Bi-polar
Rated Voltage	DC 2.2 V
Rated current	DC 2.0 A
Winding resistance	1.1Ω
Holding Torque	0.24Nm
Rotor inertia	42g・cm²
Operating temperature	−20℃～ 50℃

Note) Please refer to page F128 about end-journal turning.

Standard products in stock
2TMB series

Rolled Ball Screw ＋ 2-phase Stepping Motor

2TMB0805

Shaft dia. ϕ8 Lead : 5mm
Travel : 150mm

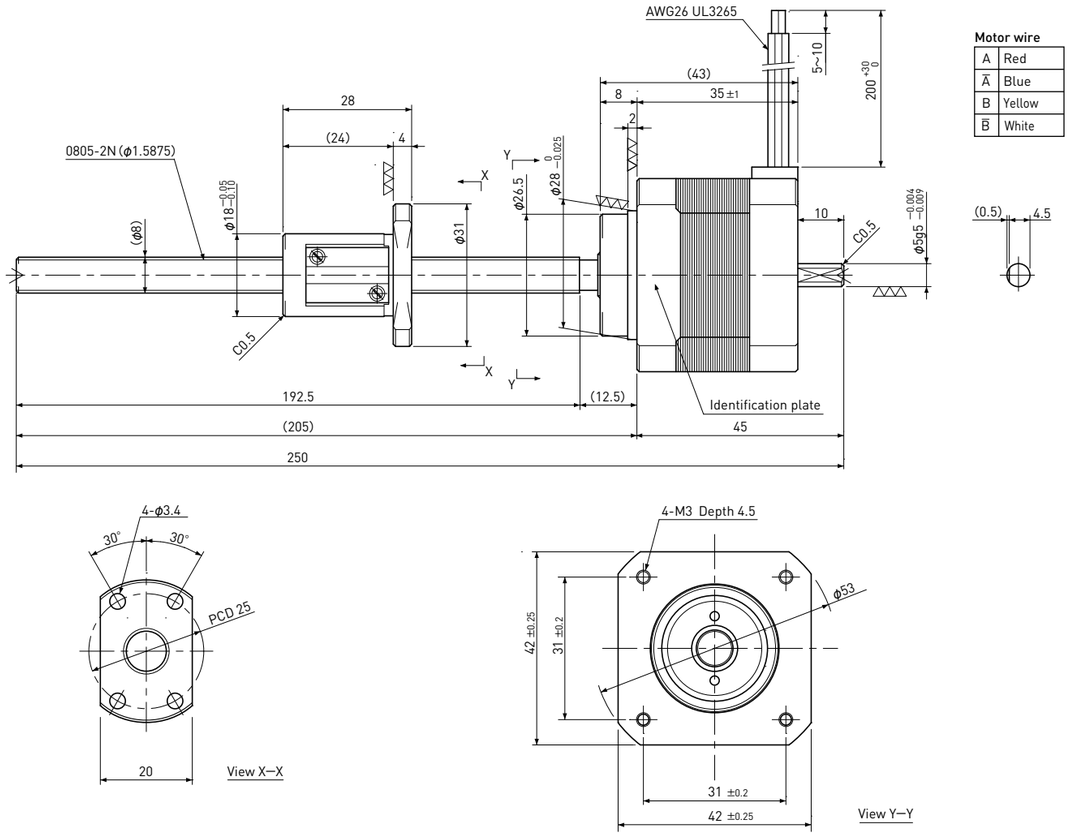

Recommended Drivers	SD4030B2	
Recommended accessories	Motor side Supporting plate	MP-42A or MP-42B
	Exclusive Support Unit	SP-42S
	Nut Block	NB-0805R

Note) Refer to page F160 for connection diagram of recommended Drivers.

Ball Screw Specifications	
Accuracy grade	Equivalent to JIS Ct7
Thread direction	Right
Axial play	0.03mm or less
Reference Thrust	50N
Shaft material	Stainless steel
Nut material	Chrome-molybdenum steel
Surface hardness	Min. HRC55 (Thread area)
Lubricant	KSS original grease MSG No.2

Motor Specifications	
Basic step angle	1.8°
Driving method	2-phase Bi-polar
Rated Voltage	DC 2.2 V
Rated current	DC 2.0 A
Winding resistance	1.1Ω
Holding Torque	0.24Nm
Rotor inertia	42g・cm²
Operating temperature	−20℃～ 50℃

Note) Please refer to page F128 about end-journal turning.

MoBo Series
Linear Actuator External type
2-phase Motor & Rolled Ball Screw type

Standard products in stock
2TMB series

Rolled Ball Screw ＋ 2-phase Stepping Motor

2TMB0812

Shaft dia. ϕ8 Lead : 12mm
Travel : 150mm

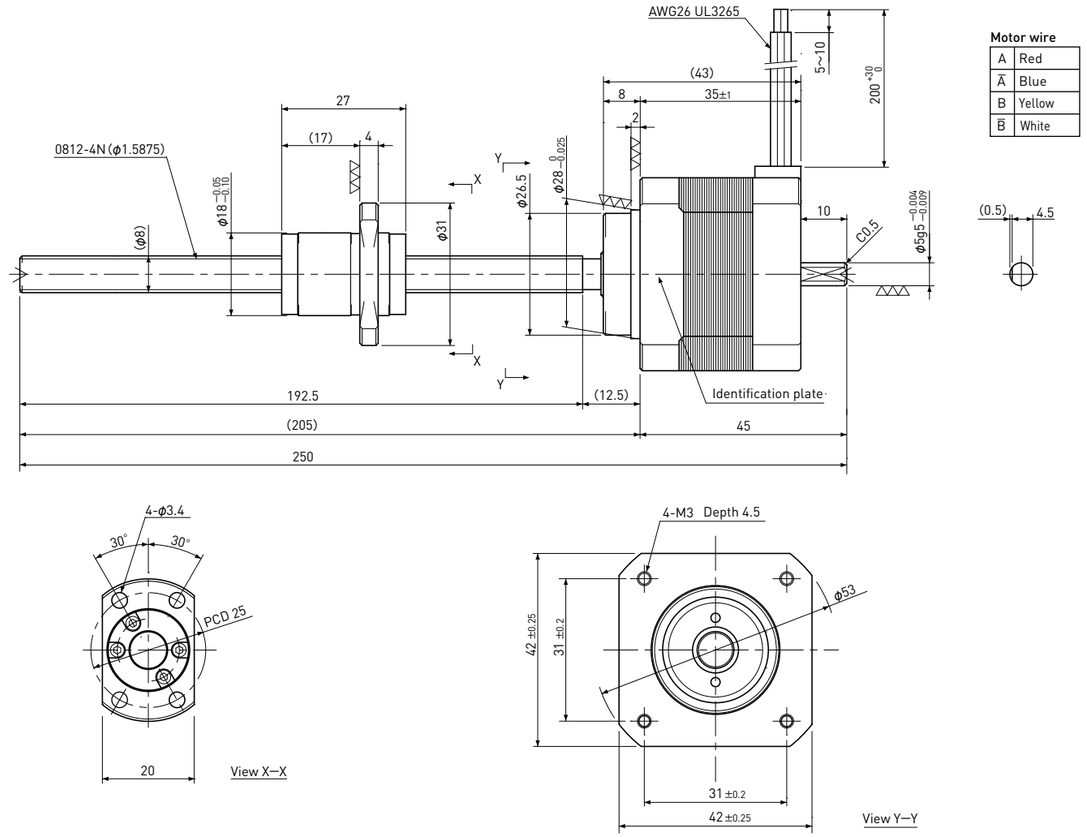

Recommended Drivers	SD4030B2	
Recommended accessories	Motor side Supporting plate	MP-42A or MP-42B
	Exclusive Support Unit	SP-42S
	Nut Block	NB-0812R

Note) Refer to page F160 for connection diagram of recommended Drivers.

Ball Screw Specifications	
Accuracy grade	Equivalent to JIS Ct7
Thread direction	Right
Axial play	0.03mm or less
Reference Thrust	25N
Shaft material	Stainless steel
Nut material	Chrome-molybdenum steel
Surface hardness	Min. HRC55 (Thread area)
Lubricant	KSS original grease MSG No.2

Motor Specifications	
Basic step angle	1.8°
Driving method	2-phase Bi-polar
Rated Voltage	DC 2.2 V
Rated current	DC 2.0 A
Winding resistance	1.1Ω
Holding Torque	0.24Nm
Rotor inertia	42g・cm²
Operating temperature	−20℃～ 50℃

Note) Please refer to page F128 about end-journal turning.