Standard products in stock SRT series

SRT0602 | Shaft dia. φ6 Lead 2mm | Ct7&Ct10

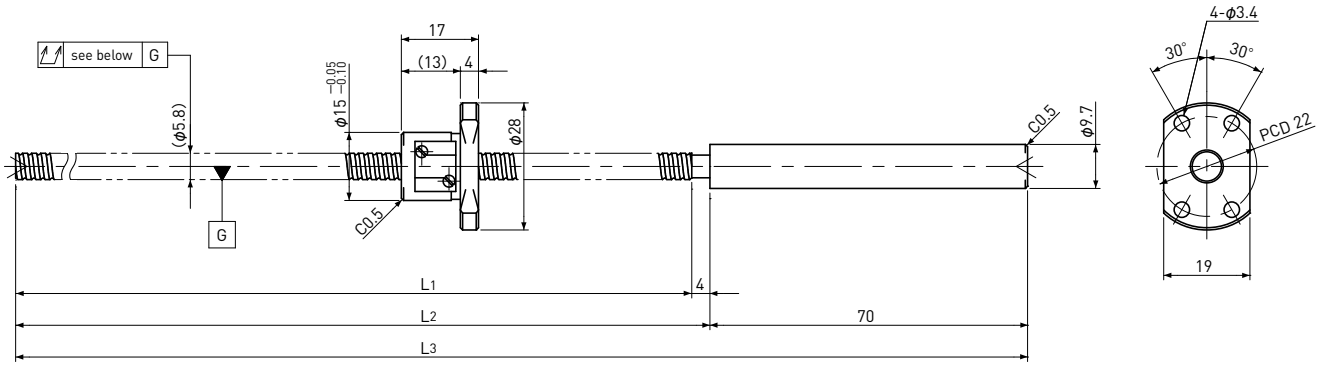

Unit : mm

Ball Screw Specifications		
Ball size		φ1.0
Number of thread		1
Thread direction		Right
Shaft root dia.		φ5.1
Number of circuit		2.7×1
Material	Shaft	SCM415H+SUS303
	Nut	SCM415H
Surface hardness		HRC58～ (Thread area)
Anti-rust treatment		Anti-rust oil

End-journal profile Supported-side

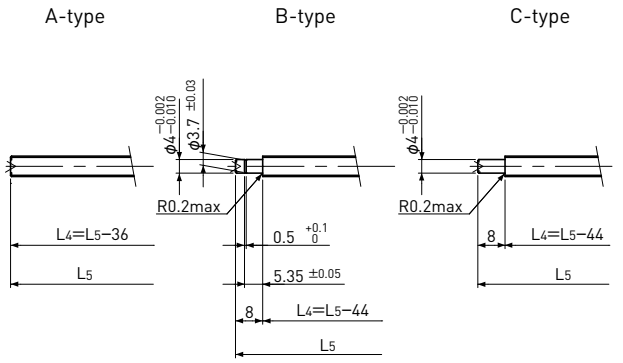

Fixed-side

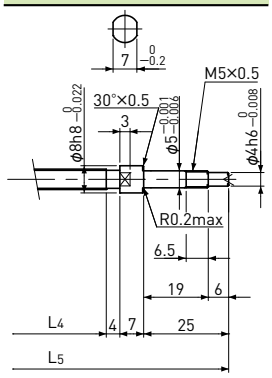

L_4 : Thread length after end-journal machining.
L_5 : Total length after end-journal machining.

Support-unit Recommendation			
	Supported-side	:	MSU-5CS/5GS
	Fixed-side	:	MSU-5C/5G

D-type : Other than the above.

Unit : mm

Ball Screw Model	Travel	Grade	Shaft length			Lead accuracy		Total Run-out	Axial play	Preload Torque Nm	Basic Load Rating N	
			L_1	L_2	L_3	Travel deviation e_p	Variation V_{300}				Dynamic Ca	Static Coa
SRT0602-146R220C7	125	Ct7	146	150	220	±0.02	—	0.080	～0.020	—	750	1200
SRT0602-261R335C7	240	Ct7	261	265	335	±0.04	—	0.120				
SRT0602-146R220C10	125	Ct10	146	150	220	±0.10	—	0.160	～0.050			
SRT0602-261R335C10	240	Ct10	261	265	335	±0.18	—	0.240				

Note) Please refer to page A287 for order code of end-journal machining.