SRT1202K

Compact Nut

Shaft dia. ϕ12 Lead 2mm

Ct7&Ct10

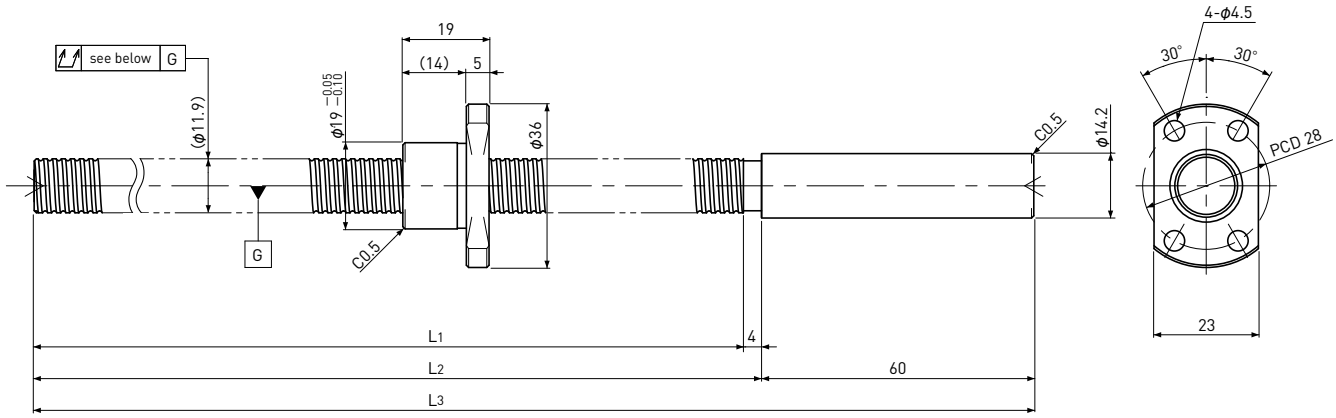

Unit : mm

Ball Screw Specifications		
Ball size		ϕ1.2
Number of thread		1
Thread direction		Right
Shaft root dia.		ϕ11.0
Number of circuit		1×3
Material	Shaft	S55C+SUS303
	Nut	SCM415H
Surface hardness		HRC58～ (Thread area)
Anti-rust treatment		Anti-rust oil

End-journal profile Supported-side

A-type B-type C-type

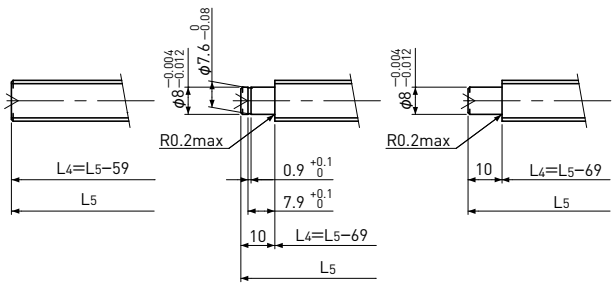

Fixed-side

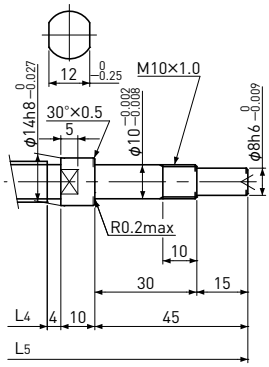

L4 : Thread length after end-journal machining.
L5 : Total length after end-journal machining.

Support-unit Recommendation	Supported-side	:	—
	Fixed-side	:	—

D-type : Other than the above.

Unit : mm

Ball Screw Model	Travel	Grade	Shaft length			Lead accuracy		Total Run-out	Axial play	Preload Torque Nm	Basic Load Rating N	
			L_1	L_2	L_3	Travel deviation e_p	Variation V_{300}				Dynamic Ca	Static Coa
SRT1202K-271R335C7	245	Ct7	271	275	335	±0.04	—	0.080	～0.020	—	1600	3700
SRT1202K-271R335C10	245	Ct10	271	275	335	±0.19	—	0.160	～0.050			

Note) Please refer to page A287 for order code of end-journal machining.