Standard products in stock
TMB series

Rolled Ball Screw ＋ 5-phase Stepping Motor

TMB0601

Shaft dia. φ6 Lead : 1mm
Travel : 75mm

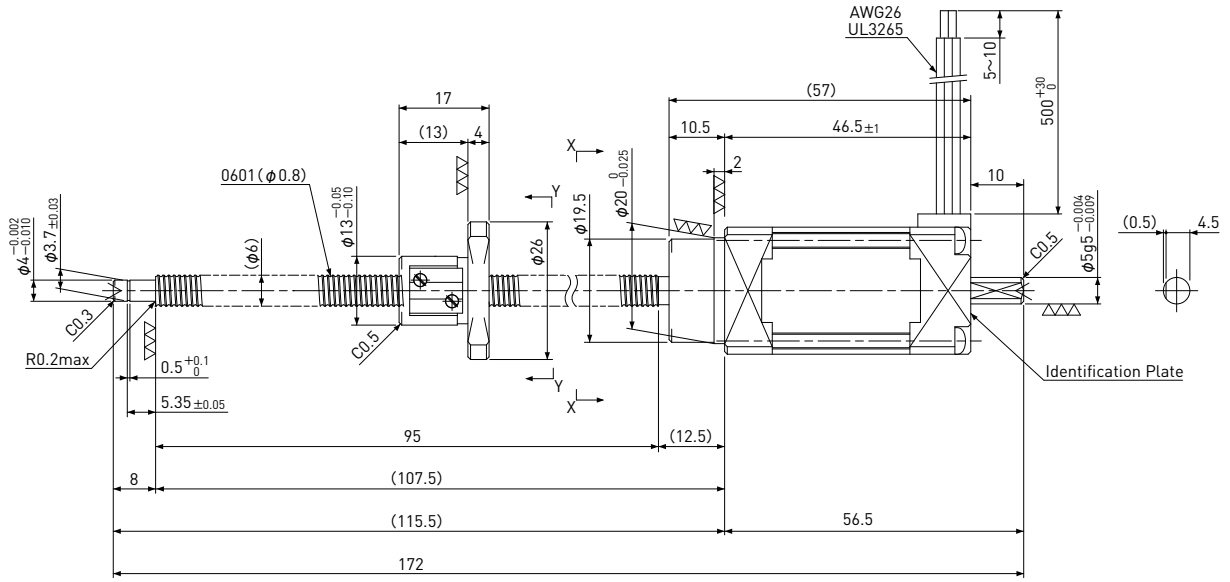

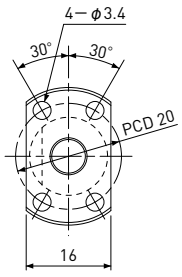

View Y−Y

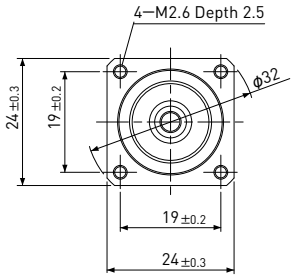

View X−X

Recommended Drivers	KR-A5CC KR-A55MC (Micro step) KR-A535M (Micro step / AC-100～220V)

Note) Refer to page F159, F160 for connection diagram of recommended Drivers.

Recommended accessories	Motor side Supporting plate	MP-24A or MP-24B
	Supported side Bracket	SP-24
	Nut Block	NB-0601R

Ball Screw Specifications	
Accuracy grade	JIS Ct7
Thread direction	Right
Axial play	0.020mm or less
Reference Thrust	100N
Shaft & Nut material	Chrome-molybdenum steel
Surface Coating	Black Chrome coating on Shaft
Surface hardness	HRC58～62 (Thread area)
Lubricant	KSS original grease MSG No.1

Motor Specifications	
Basic step angle	0.72°
Rated Voltage	DC 1.28 V
Rated current	0.75A/phase
Winding resistance	1.7Ω
Holding Torque	0.028Nm
Rotor inertia	8.8g・cm²
Operating temperature	−20℃～ 50℃

Note) Only shaft end cutting is available.
Other than that, it would be customized order.