Standard products in stock
2TMB series

Rolled Ball Screw ＋ 2-phase Stepping Motor

2TMB0801

Shaft dia. ϕ8 Lead : 1mm
Travel : 150mm

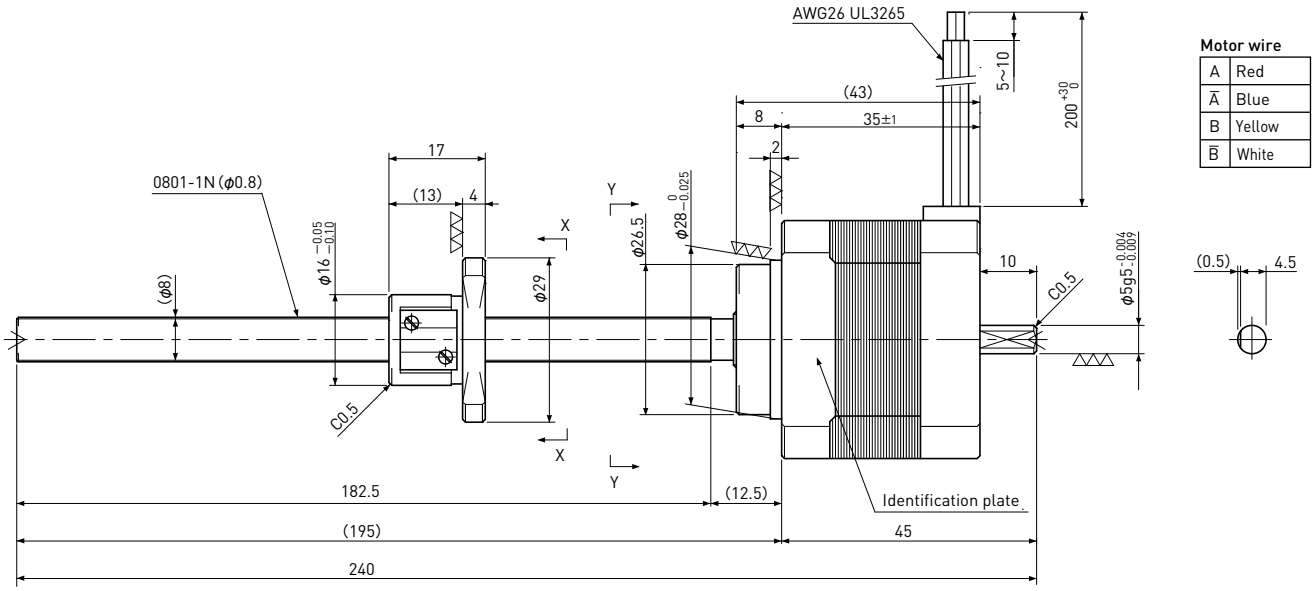

Motor wire

A	Red
$\bar{A}$	Blue
B	Yellow
$\bar{B}$	White

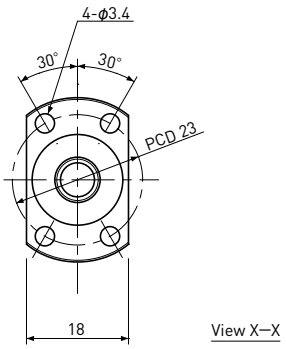

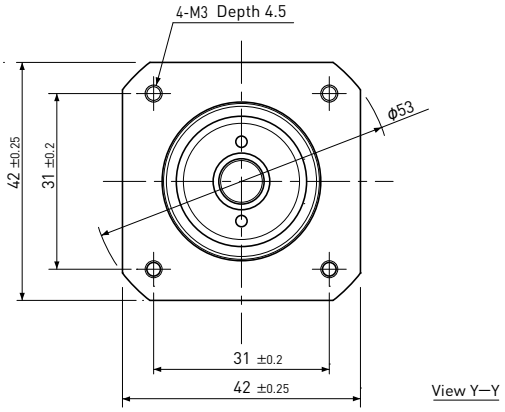

Recommended Drivers	SD4030B2

Note) Refer to page F160 for connection diagram of recommended Drivers.

Recommended accessories	Motor side Supporting plate	MP-42A or MP-42B
	Exclusive Support Unit	SP-42S
	Nut Block	NB-0801R

Ball Screw Specifications	
Accuracy grade	Equivalent to JIS Ct7
Thread direction	Right
Axial play	0.03mm or less
Reference Thrust	75N
Shaft material	Stainless steel
Nut material	Chrome-molybdenum steel
Surface hardness	Min. HRC55 (Thread area)
Lubricant	KSS original grease MSG No.2

Motor Specifications	
Basic step angle	1.8°
Driving method	2-phase Bi-polar
Rated Voltage	DC 2.2 V
Rated current	DC 2.0 A
Winding resistance	1.1Ω
Holding Torque	0.24Nm
Rotor inertia	42g·cm²
Operating temperature	−20℃～ 50℃

Note) Please refer to page F128 about end-journal turning.