Standard products in stock NSG series

NSG0802 | Shaft dia. φ8 Lead 2mm | C3&C5

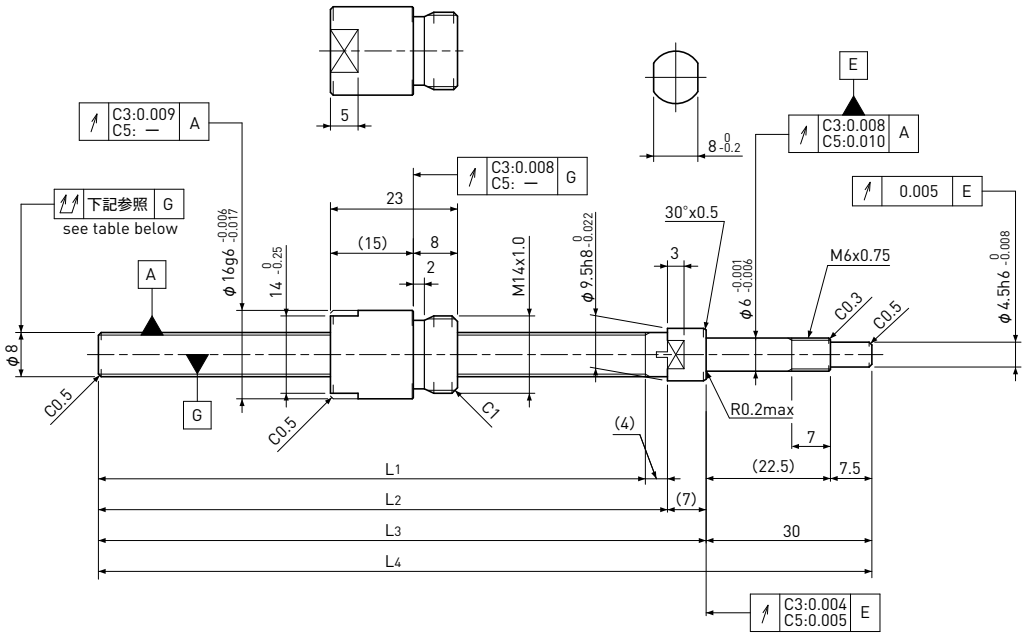

Unit : mm

Ball Screw Specifications	
BCD	φ8.30
Thread direction	Right
Shaft, Nut material	SCM415H
Surface hardness	HRC58～62 (Thread area)
Anti-rust treatment	Anti-rust oil

Supported-side end-journal profile

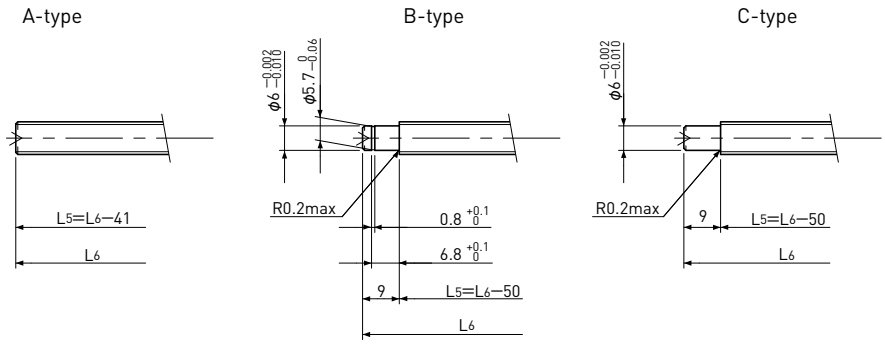

L_5 : Thread length after end-journal machining.
L_6 : Total length after end-journal machining.

Support-unit Recommendation			
	Supported-side	:	MSU-6CS/6GS
	Fixed-side	:	MSU-6C/6G

D-type : Other than the above.

Unit : mm

Ball Screw Model	Travel	Grade	Shaft length				Lead accuracy		Total Run-out	Axial play	Preload Torque Nm	Basic Load Rating N	
			L_1	L_2	L_3	L_4	Travel deviation e_p	Variation V_u				Dynamic Ca	Static Coa
NSG0802-099R140C3	75	C3	99	103	110	140	±0.008	0.008	0.035	0	～0.0075	1300	2300
NSG0802-159R200C3	135	C3	159	163	170	200	±0.010	0.008	0.035				
NSG0802-099R140C5	75	C5	99	103	110	140	±0.018	0.018	0.050	～0.005	—	1300	2300
NSG0802-159R200C5	135	C5	159	163	170	200	±0.020	0.018	0.050				

Note) Please refer to page 5 for order code of end-journal machining.